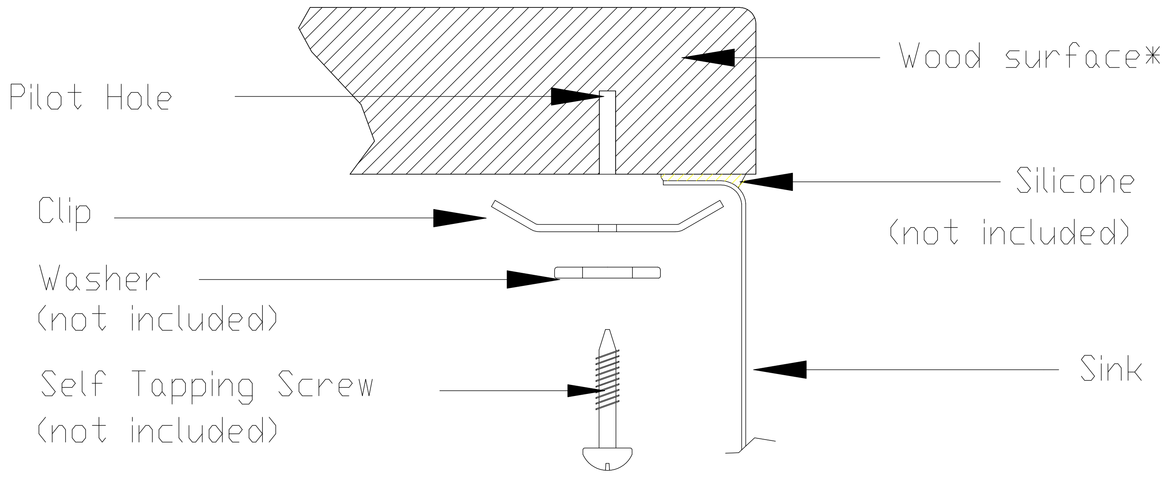

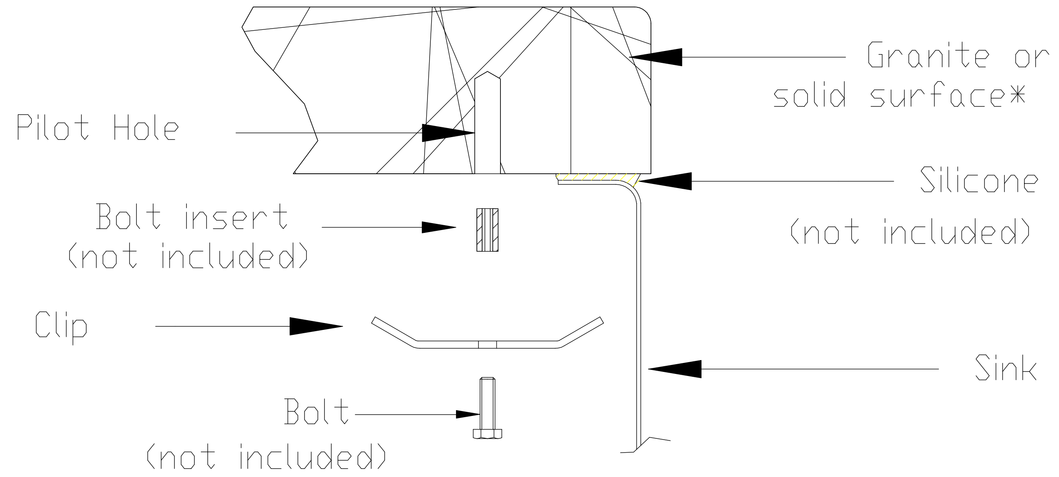

JULIEN®
Home Refinements™

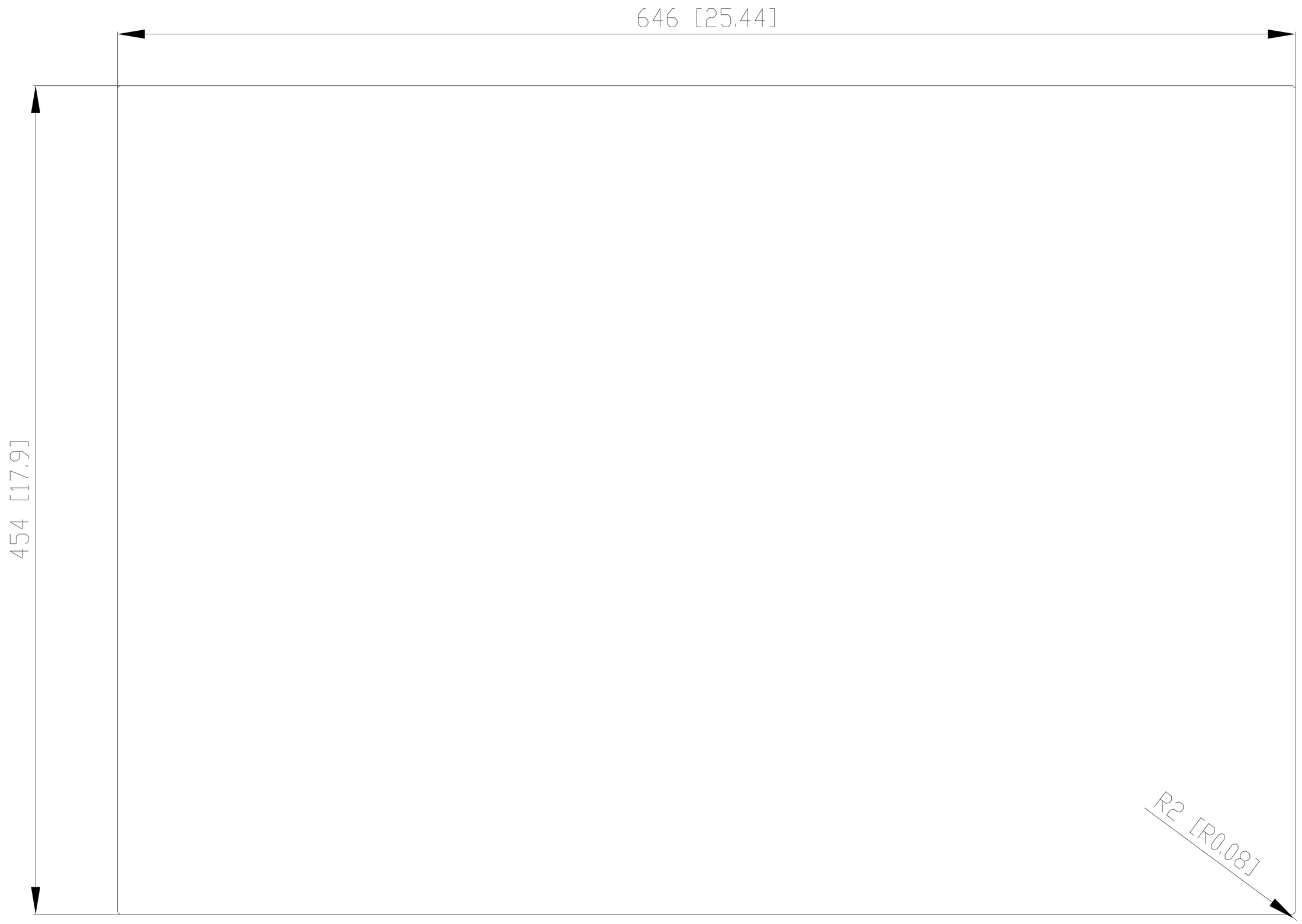

REV	BY	DESCRIPTION	DATE	DRAWN: N2B	ITEM NUMBER 590003160
				DATE: 2006/03/28	